Plate Processor
85/135

This manual is for the daily users of the equipment.
Always read the ***Safety Instruction Manual part No 21741*** before starting up the equipment and keep it with the machine for reference at all times.

Edition AE, October 2006 **This book has part no. 51199-GB**

Section 1

INTRODUCTION
FUNCTIONAL DESCRIPTION
OPERATING PROCEDURES

1

Section 2

MAIN COMPONENTS OVERVIEW
CLEANING AND MAINTENANCE

2

Section 1 Contents

INTRODUCTION 1/3

IMPORTANT! 1/3
THIS MANUAL 1/3
WARNINGS, CAUTIONS AND NOTES! 1/4

FUNCTIONAL DESCRIPTION 1/5

GENERAL 1/5

OPERATING PROCEDURES 1/7

TURNING THE PROCESSOR ON 1/7
STARTING THE PROCESSOR 1/9
MANUAL START 1/9
AUTO-START 1/9
NEW CHEMISTRY/CLEANING 1/9
DAILY START-UP 1/9
PROCESSING FROM THE FEED TABLE 1/11
PROCESSING FROM A PLATESETTER 1/11
USING THE "REWASH" SLOT 1/13
SHUTDOWN PROCEDURE 1/15
TURNING THE PROCESSOR TO “OFF” 1/15
COMPLETE SHUTDOWN 1/15

1

INTRODUCTION

IMPORTANT!

- **Approvals:** The processor is manufactured according to legal demands. For compliance with the requirements the equipment is tested by Underwriters Laboratories or other accredited authority. Approvals will appear from the labels attached to the processor name plate or the frame part of the processor.

- **Intended use of the equipment:** Development of photographic materials as specified in "TECHNICAL SPECIFICATIONS" in Section 1 of the Service Manual.

- **Installation:** It is the responsibility of the owner and operator/s of this processor, that the installation is made in accordance with local regulations, and by engineers authorized to carry out plumbing and electrical installations.
  Installation, service and repair must be performed only by service technicians who are trained in servicing the equipment.
  The installation procedure is described in "INSTALLATION" in Section 2 of the Service Manual.
  The manufacturer cannot be held responsible for any damage caused by incorrect installation of this processor.

- **Technical data:** Observe technical data from the processor name plate located on the rear panel of the processor.

THIS MANUAL

- **Intended use of this manual:** This manual is for the daily user of the equipment.
  Always read the ***Safety Instruction Manual, part No 21741*** before starting up the equipment and keep it with the machine for reference at all times.

- **Illustrations:** As this manual covers a complete range of processors the illustrations will not fully reflect your present processor.

- **Reservations:** This manual was written and illustrated using the best possible information available at the time of publication.
  Any differences between this manual and the equipment reflect improvements introduced after the publication of the manual.
  Changes, technical inaccuracies and typographic errors will be corrected in subsequent editions.
  As a part of our policy of continuous improvement, we reserve the right to alter design and specifications without further notice.

WARNINGS, CAUTIONS AND NOTES!

Throughout the manual warnings, cautions, and notes are written in bold on a grey background like the example below:

NOTE! Do not use any abrasive materials when cleaning the processor panels.

1

Explanation:

NOTE!
The operator should observe and/or act according to the information in order to obtain the best possible function of the equipment.

CAUTION!
The operator must observe and/or act according to the information in order to avoid any mechanical or electrical damage to the equipment.

WARNING!
The operator must observe and/or act according to the information in order to avoid any personnel injury.

FUNCTIONAL DESCRIPTION

GENERAL

(See illustration below)
The basis processor contains four major sections:

DEVELOPER (1)
Developing of the plate and removing of the remaining unexposed emulsion by means of the brush rollers.

WASH (2)
Washing off the developer chemicals from the developed plate.

GUM/FINISHING (3)
Application of a thin layer of gum onto the developed and washed plate to protect it from oxidation, dirt, fingerprints etc.

DRYER (4)
Drying of the plate to ensure immediate handling of the plate.

To match various plate processing requirements the processor can be extended with one ore more of the following sections:

PREHEAT (5)
Hardening of the emulsion of the exposed plate by means of InfraRed (IR) heaters.

PREWASH (6)
Washing and brushing off the PVA-coating from the plate.

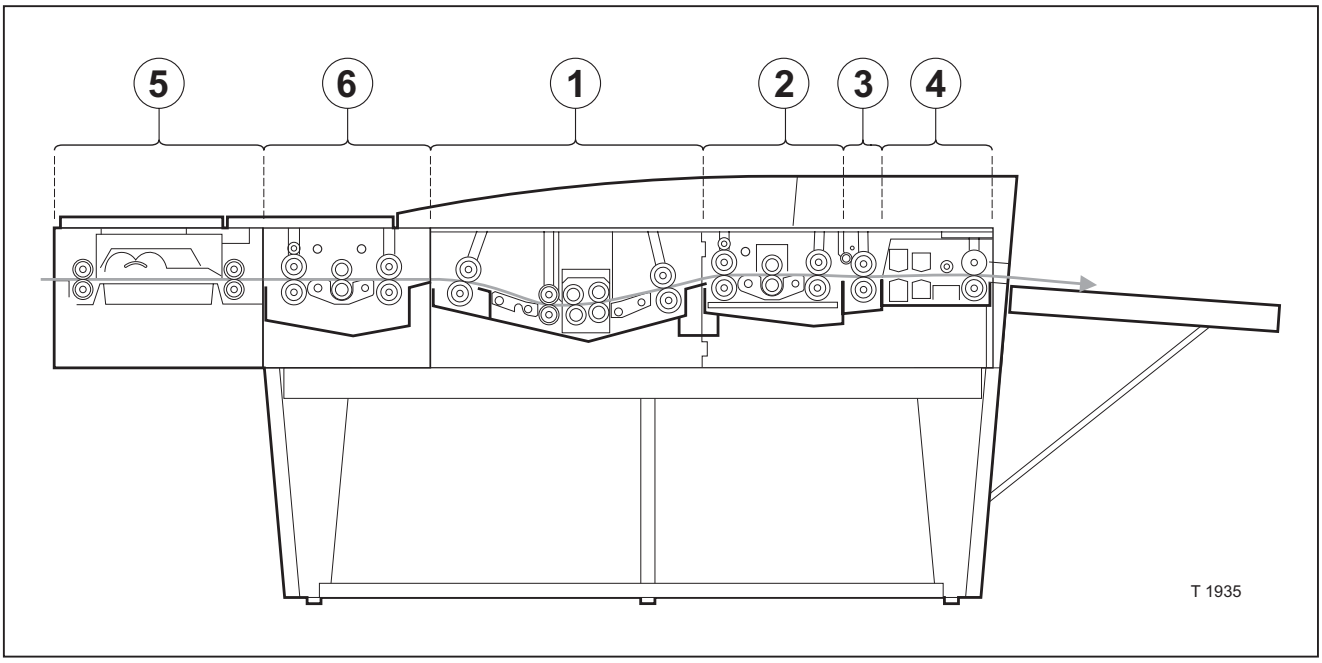

1

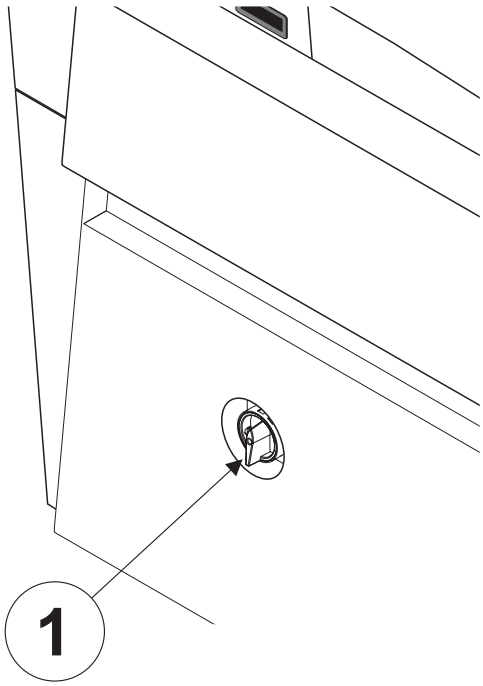

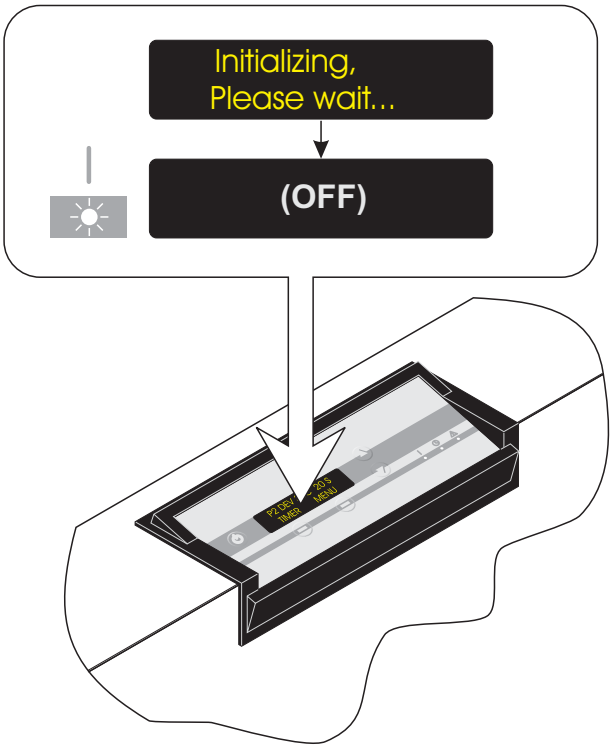

T31469

OPERATING PROCEDURES

TURNING THE PROCESSOR ON

(See diagram opposite)

- Turn main switch to ON/I.
- The “Power ON” indicator is lit, the processor initializes for a short while and then turns into “OFF” mode.

1

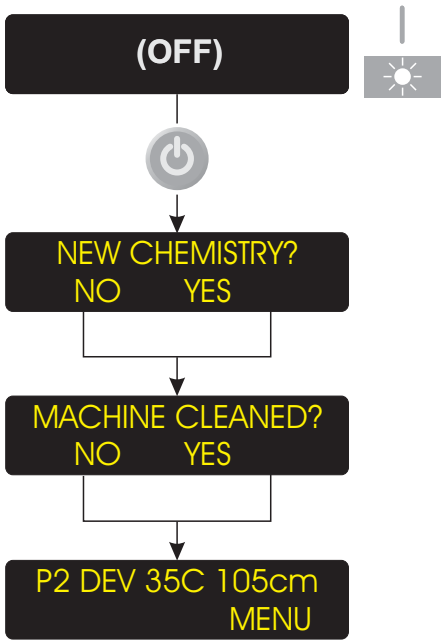
(OFF)
NEW CHEMISTRY?
NO YES
MACHINE CLEANED?
NO YES
P2 DEV 35C 105cm
MENU

T31470

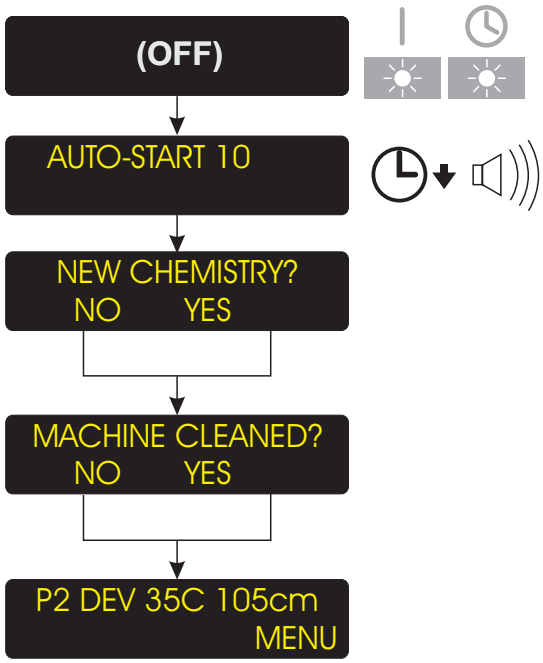
(OFF)
AUTO-START 10
NEW CHEMISTRY?
NO YES
MACHINE CLEANED?
NO YES
P2 DEV 35C 105cm
MENU

STARTING THE PROCESSOR

There are two ways of starting the processor:

- **MANUAL START**
  or
- **AUTO-START**

MANUAL START

(See upper diagram opposite)

- The processor must be in “OFF” mode.
- Push the “Stand-by” key and the processor switches into “STAND-BY” mode.

(See also "NEW CHEMISTRY/CLEANING").

AUTO-START

(See lower diagram opposite).

The processor’s AUTO-START function enables automatic start-up and shut down.

- If AUTO-START function is switched on, the “AUTO” indicator will be lit when the processor is in “OFF” mode.
- The display will turn on 10 secs. before start-up and a beeper will beep for app. 5 secs. to advise the operator, and when time is up, the processor automatically switches into “STAND-BY” mode.

(See also "NEW CHEMISTRY/CLEANING").

NOTE! Even though the AUTO-START function is switched on, you can start-up and shut down the processor manually any time.

NEW CHEMISTRY/CLEANING

If the processor has been shut down completely or if low level is detected in the developer section when in OFF mode, you will be asked the following when starting up:

NEW CHEMISTRY?
Push YES if you want the developer section to be filled with new chemistry, otherwise push NO.

If the processor is configured with the HISTORY function ON you will also be asked:

MACHINE CLEANED?
Push YES if you have cleaned the processor otherwise push NO.

DAILY START-UP

- Make sure, that waste containers are empty and that replenishment containers are sufficiently filled.
- If the processor is not already started (AUTO-START) start the processor manually as described in “STARTING THE PROCESSOR”.
- The processor will warm up.
- Make appropriate program selection if necessary.
- When the display shows “READY”, processing can start.

1

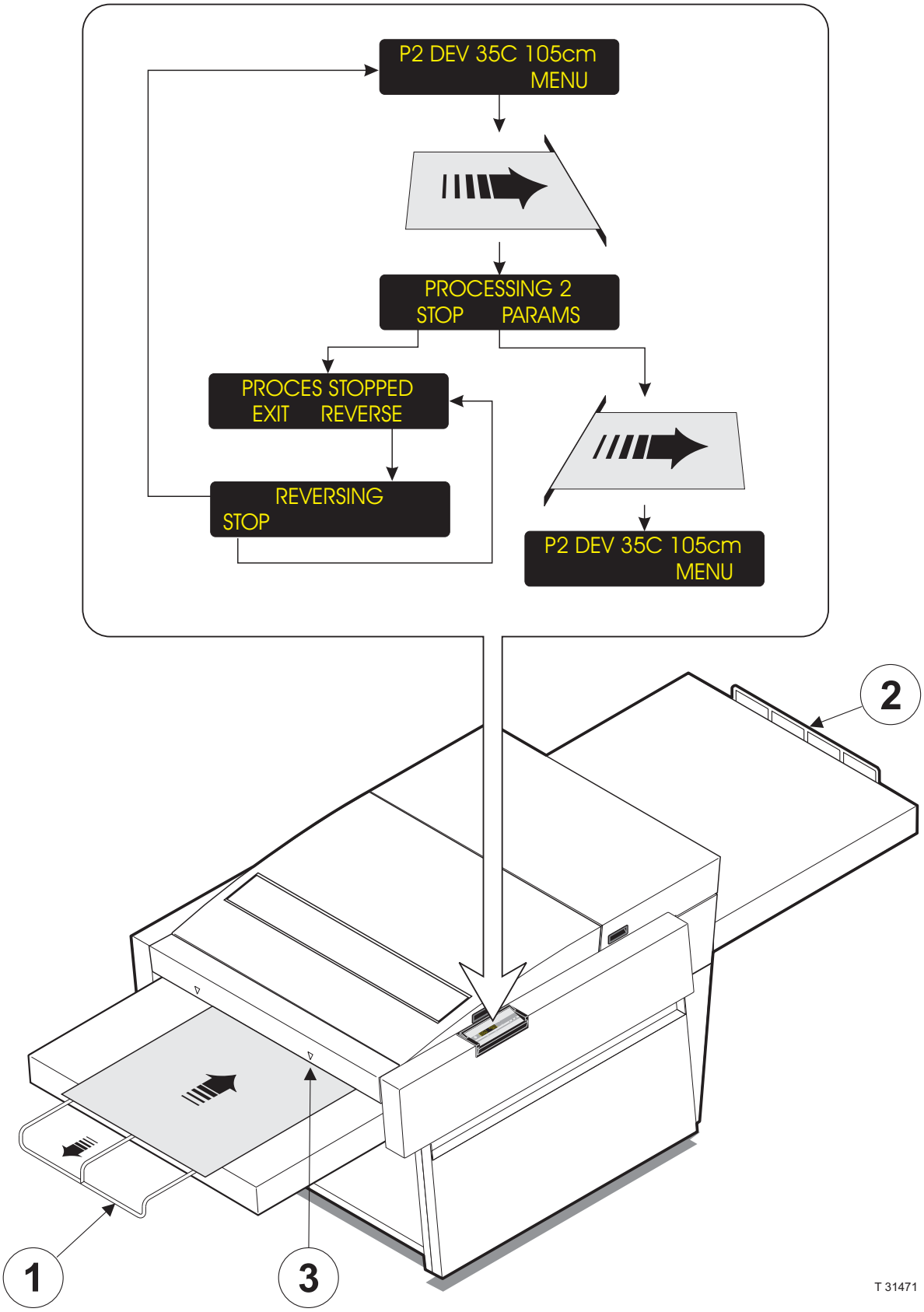
P2 DEV 35C 105cm
MENU
PROCESSING 2
STOP PARAMS
PROCES STOPPED
EXIT REVERSE
REVERSING
STOP
P2 DEV 35C 105cm
MENU
2
1
3
T 31471

PROCESSING FROM THE FEED TABLE

Off-line processors only!

(See diagram opposite)

- The processor must be “READY” in “STAND-BY” mode.
- If processing extra long plates the extension brackets **(1)** and **(2)** should be pulled out.
- Enter the plate observing that the plate material is fed with the emulsion side upwards preferably from the centre of the feed table underneath one of the input sensors **(3)** and that the plate is fed straight and slowly into the processor.
  When the plate engages the input sensor, the processor switches into “PROCESS” mode.
- If necessary you can stop the processing and reverse the transport system to remove the plate again.

CAUTION! Reversing is not possible when the plate has left the input sensor.

- Pushing the “PARAMS” soft key while processing enables you to change the program parameters.

NOTE! Changes in transport or brush speed parameters will not take effect until motors stops and starts again.

- The processor automatically returns to “STAND-BY” mode shortly after the plate exits.

PROCESSING FROM A PLATESETTER

On-line processors only!

(See illustration opposite).

- The processor must be “READY” in “STAND-BY” mode.
- If processing extra long plates, the extension bracket **(2)** should be pulled out.
- The processor will automatically start up in “PROCESS” mode when a plate enters the processor from the platesetter.
- Pushing the “PARAMS” soft key while processing enables you to change the program parameters.

NOTE! Changes in transport or brush speed parameters will not take effect until motors stops and starts again.

- The processor automatically returns to “STAND-BY” mode shortly after the plate exits.

1

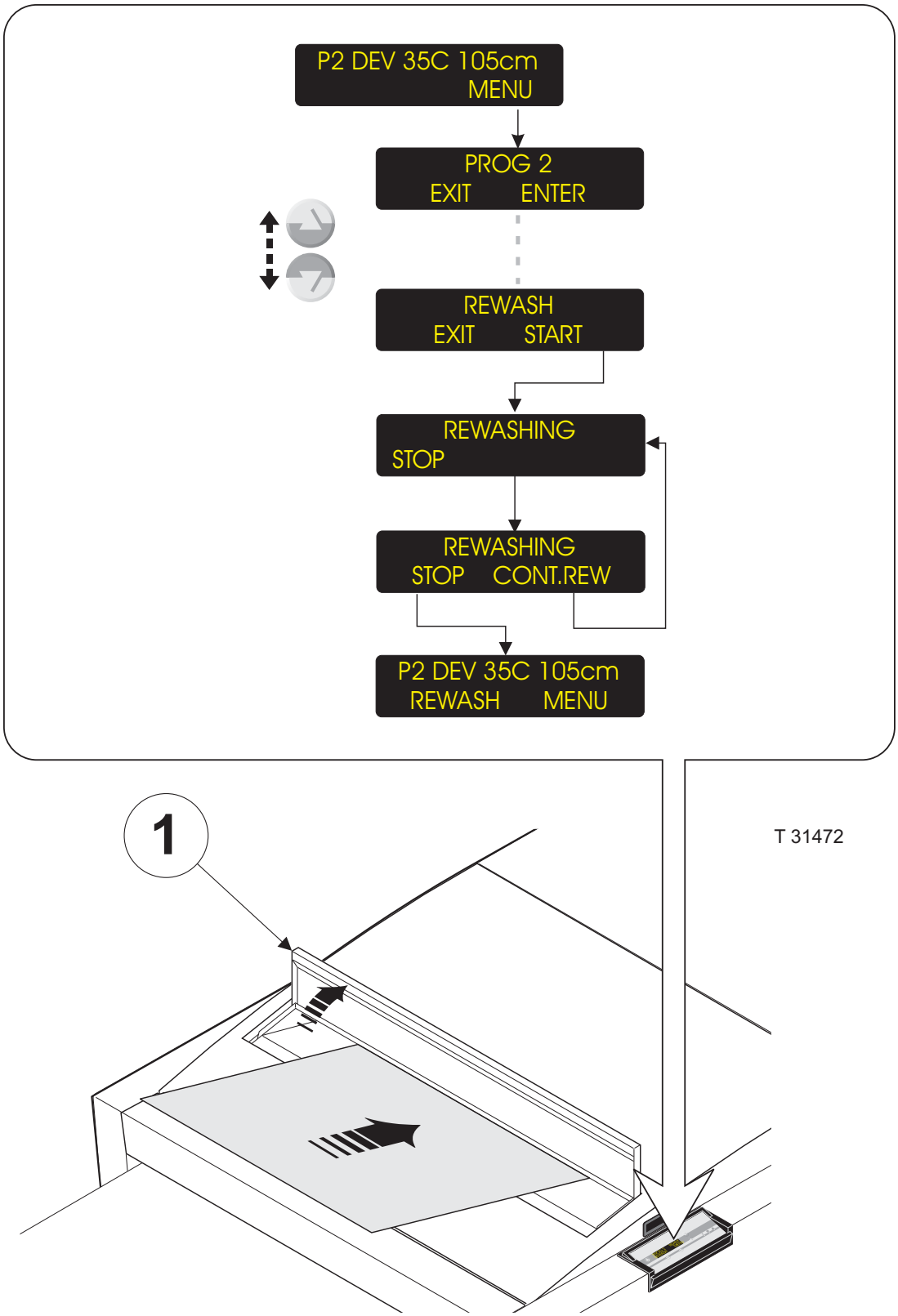
P2 DEV 35C 105cm
MENU
PROG 2
EXIT ENTER
REWASH
EXIT START
REWASHING
STOP
REWASHING
STOP CONT.REW
P2 DEV 35C 105cm
REWASH MENU
1
T 31472

USING THE "REWASH" SLOT

Not all models!

(See illustration opposite).

- The processor must be “READY” in “STAND-BY” mode.
- Enter the "MENU" and use "Up/Down" keys to find the "REWASH" function.
- Open the "REWASH" lid **(1)**.
- Push “START” and the washing, gumming and drying functions start while the developing and replenishment functions remain deactivated.
- Enter a plate into the rewash slot observing that it is fed with the emulsion side upwards from the centre of the “REWASH” slot and that the plate is fed straight and slowly into the slot until it engages the transport rollers.
- When the plate activates the output sensor, you are given the opportunity to enter another plate for rewashing by pushing “CONT.REW” else the processor will automatically return to “STAND-BY” shortly after the plate has left the processor.
- Close the “REWASH” lid **(1)** when finished.

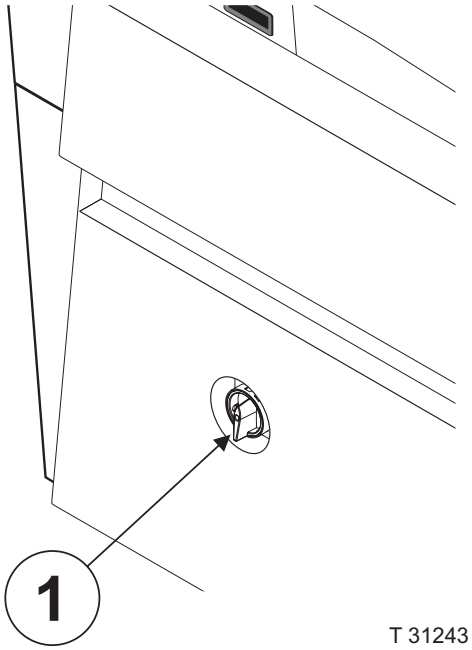
1
T 31243

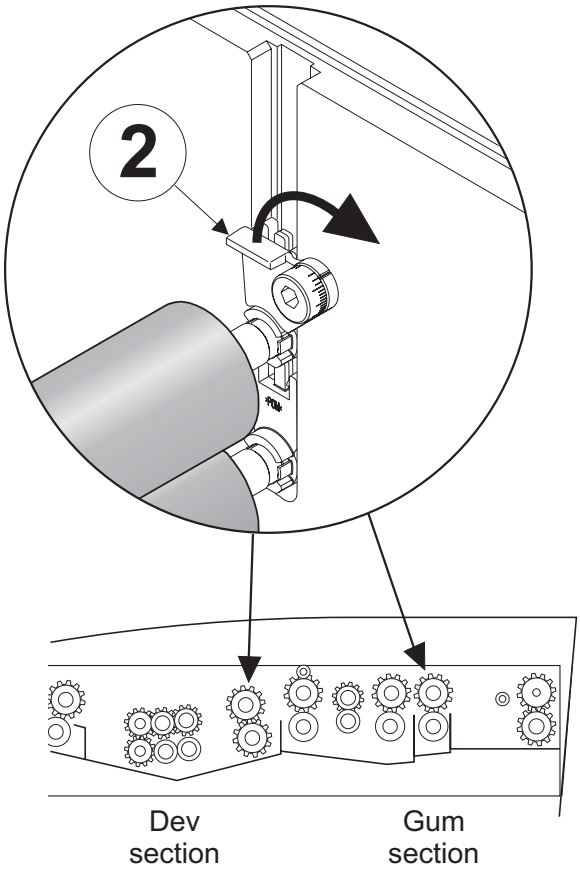
2
Dev
section
Gum
section
T 31473

SHUTDOWN PROCEDURE

TURNING THE PROCESSOR TO “OFF”

- The processor should be in “STAND-BY” mode.
- There are several ways to turn the processor to “OFF”:

”STAND-BY” button:
Push the “STAND-BY” button on the control panel to turn off the processor.

”AUTO-STOP” function:
The processor will automatically turn off if the “AUTO-STOP” parameter in the AUTO-MODE function is set to ON.
(See description in the separate "PTA Control Panel" manual).

”TIMER” function:
The “TIMER” function enables you to turn the processor off and at the same time select when the processor should start up again.
(See description of the “TIMER” function in the separate "PTA Control Panel" manual).

”GUM-RINSE” function:
Run the “GUM-RINSE” program (not on all models).
When finished the processor will automatically turn off.

NOTE! If the processor is turned off without running the “GUM-RINSE” function first, make sure that the ”JOG” function is set to run also in “OFF” mode.

COMPLETE SHUTDOWN

NOTE! The processor should only be shut down completely for holidays or for maintenance and servicing purposes.

(See illustration opposite).

- Turn the processor to “OFF” as previously described.

CAUTION! Processors with preheat must cool down for app. 20 min. before switching the main switch off.

- Shut down the processor by switching the main switch **(1)** to **"O" (off).**
- Release the roller locks **(2)** for the gum section rollers and on some models also for the developer section exit rollers.

1

Section 2

MAIN COMPONENTS OVERVIEW 2/3

CLEANING AND MAINTENANCE 2/7

GENERAL 2/7
CLEANING ACCESSORIES 2/8
CLEANING AGENTS 2/8
HAND-SHOWER 2/9
CLEANING/MAINTENANCE INTERVALS 2/10
GENERAL 2/10
DAILY 2/10
WEEKLY 2/10
MONTHLY 2/10
CHANGING OF DEVELOPER/WATER 2/10
FILTERS 2/10
GENERAL PROCEDURES 2/11
MECHANICAL SAFETY CHECK 2/11
CLEANING, PROCESSOR EXTERIOR 2/11
CHECK OF CONTAINER CONTENTS. 2/11
CLEANING/CHANGING FILTERS 2/12
PREWASH/WASH/GUM/FINISHER FILTERS. 2/12
DEVELOPER FILTER 2/13
RESETTING FILTER AREA 2/14
WATER SOLENOID FILTER 2/15
PREHEAT SECTION 2/17
CLEANING THE ROLLERS. 2/17
PREWASH SECTION 2/19
CHANGING THE WATER 2/19
NORMAL CLEANING 2/19
DEVELOPER SECTION 2/21
NORMAL CLEANING 2/21
MAJOR CLEANING 2/21
CHANGING THE DEVELOPER. 2/23
CLEANING OF THE
CONDUCTIVITY PROBE 2/25
WASH/RINSE SECTION. 2/27
CHANGING THE WATER 2/27
NORMAL CLEANING 2/27
MAJOR CLEANING 2/27
GUM SECTION 2/28
NORMAL CLEANING 2/28
MAJOR CLEANING 2/28
DRYER SECTION 2/29

2

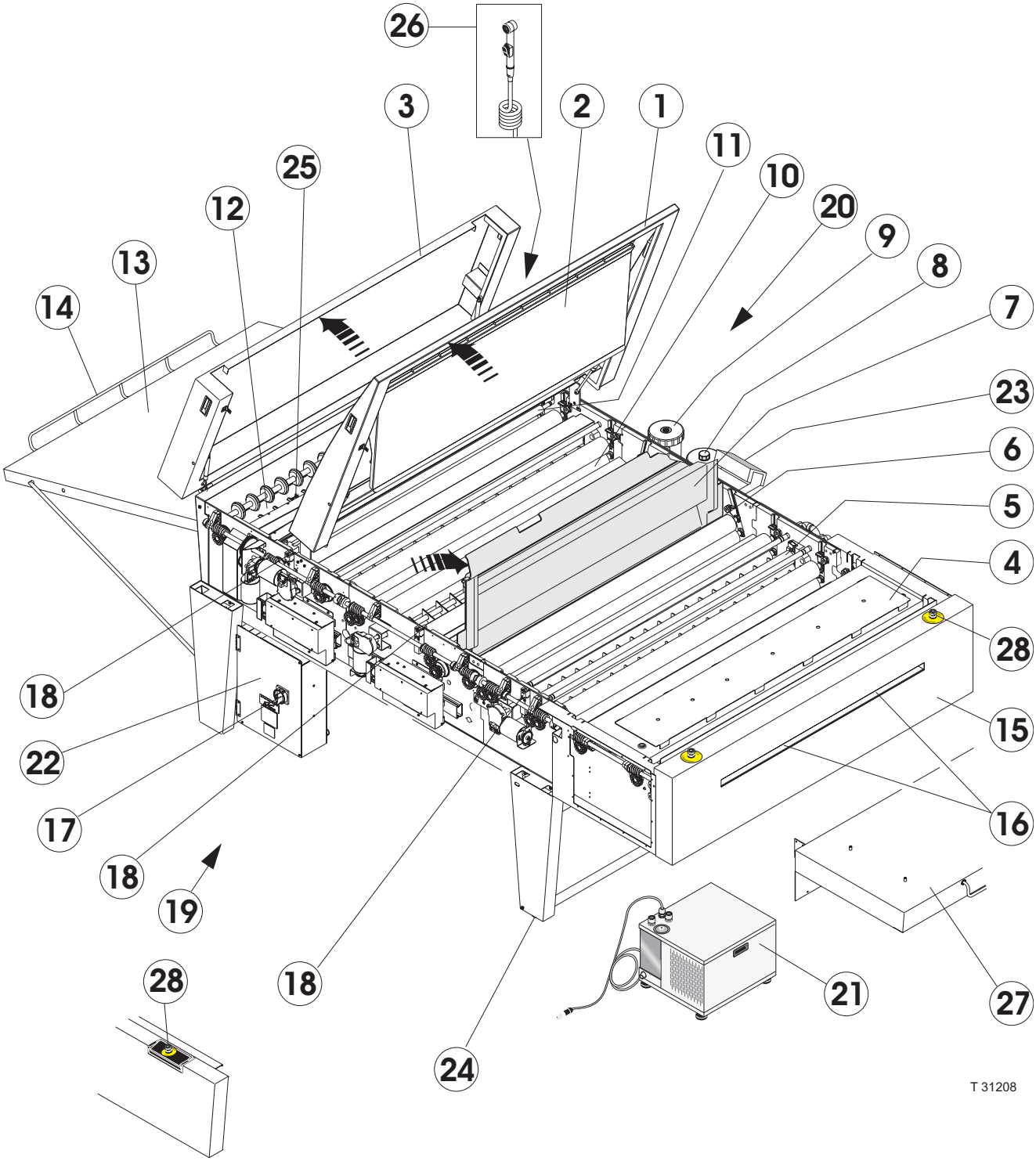
26
3
2
1
11
10
20
9
8
7
23
6
5
4
28
15
16
27
21
24
18
28
25
12
13
14
22
17
18
19
T 31208

MAIN COMPONENTS OVERVIEW

(See illustration opposite).

TOP COVER, WET SECTIONS (1)
The top cover is hinged and can easily be opened when performing service and cleaning. When open the cover is held by a pair of gas-springs.
When the top cover is opened the related interlock switch **(18)** will cut off all power to the moving parts of the machine (rollers, pumps).

REWASH SLOT (2)
(Not all models)
The rewash slot in the top cover makes it possible to enter a plate into the processor for rewashing, finishing and drying.
The rewash guide underneath the top cover ensures that a plate entered through the rewash slot are guided correctly through the wash section **(10)**.

TOP COVER, DRYER SECTION (3)
The top cover is hinged and can easily be opened when performing service and cleaning. When open the cover is held by a pair of gas-springs.
When the top cover is opened the related interlock switch **(18)** will cut off all power to the moving parts of the machine (rollers, pumps).

PRE-HEAT SECTION (4)
(Not all models)

PRE-WASH SECTION (5)
(Not all models)

DEVELOPER SECTION (6)

ANTI-OXIDATION COVER (7)
The developer section is equipped with a separate cover that helps to reduce evaporation and oxidation of the developer, as well as it helps to reduce the build-up of condensate underneath the top cover **(1)**.

CYCLONE/DEVELOPER DRAIN (8)

FILTER (9)
The developer solution is continuously circulated through a filter to keep it clean. The filter can easily be accessed when it needs to be changed.

WASH SECTION (10)

GUM SECTION (11)

DRYER SECTION (12)

EXIT TABLE (13)
(Not all models)
When processed the plate ends on the exit table.

EXTENSION BRACKET (14)
(Not all models)
The extension bracket can be pulled out when processing extra long plates.

INTERFACE PLATE (15)
(CTP On-Line processors only)
The interface plate ensures that the plate is transported safely from the setter into the processor. The interface plate will vary for different setter types.

INPUT SENSORS (16)
The 2 input sensors are placed at the processor entrance.
When a plate enters the processor, the sensors automatically start the processor provided that the processor is started up and ready to run.

MAIN SWITCH (17)
The main switch cuts off all power to the processor when set to position "0".

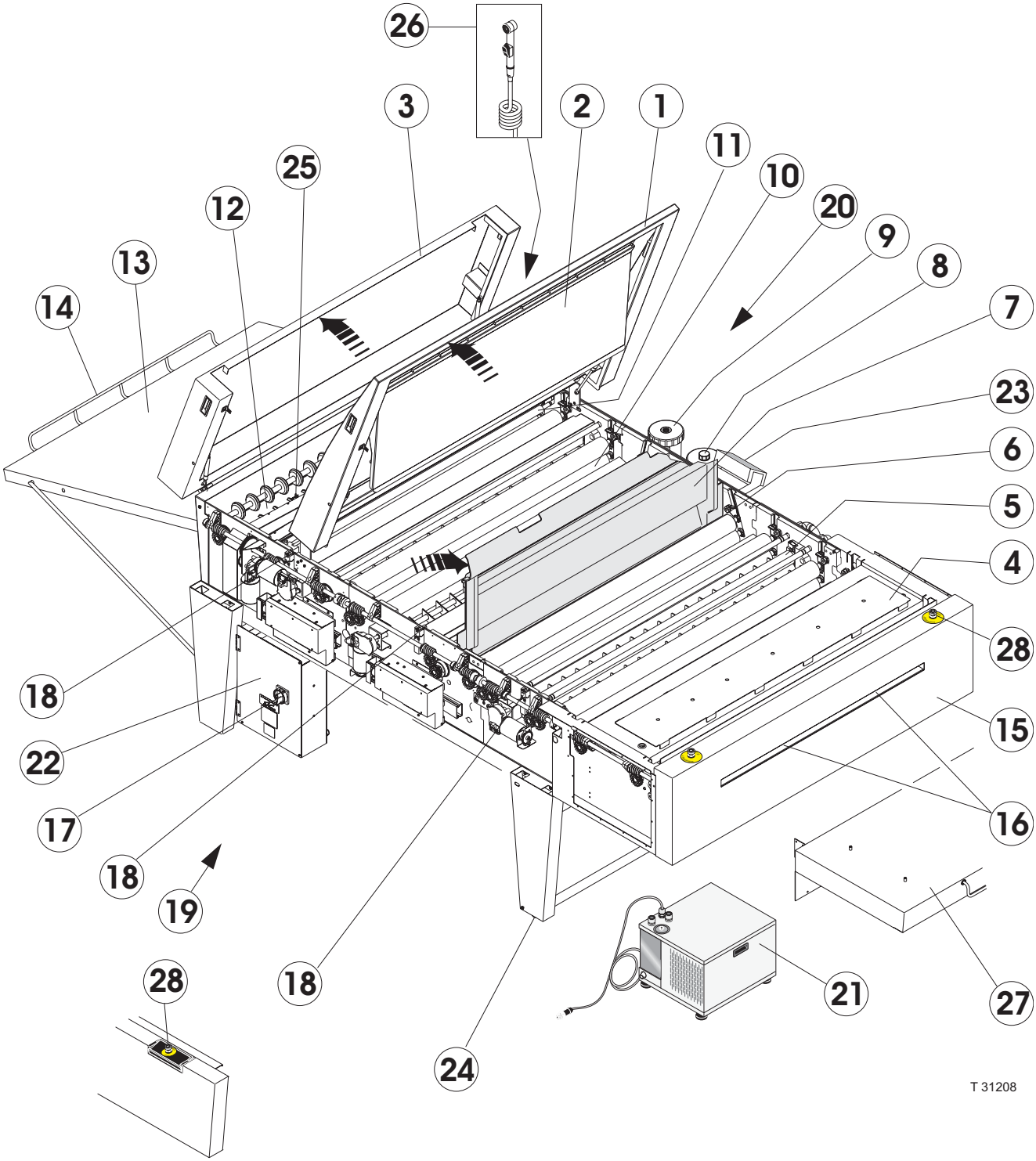
26
3
2
1
11
10
20
9
8
7
23
6
5
4
28
15
16
27
21
24
18
28
25
12
13
14
22
17
18
19
T 31208

INTERLOCK SWITCHES (18)

The processor is equipped with 3 interlock switches: One for the dryer cover **(3)**, one for the wet sections cover **(1)** and one for the pre-wash section cover (not illustrated).
When the any of the covers are opened/removed the related interlock switch will stop all moving parts (rollers, pumps) of the processor.

DRIVE SYSTEM/ELECTRONICS (19)

The processor's drive system is located at the left tank side behind a fender.
Also the boxes holding the MPU- , HPU- and HCU-boards (Master Processor Unit, High Power Unit and Heat Control Unit) are placed in this area.

CIRCULATION SYSTEM (20)

The entire circulation system is located through and below the processor's right tank side behind a fender.

CHILLER (21)

(Not all models)

The chiller helps to cool down the developer solution when necessary.

FIELD WIRING/TRANSFORMER BOX (22)

This box is located underneath the processor.
The main power connection should be made to the terminal strip in the box.
Also the fuses for all functions are located in this box.

CONTROL PANEL (23)

The processor is operated from the Control Panel. See detailed description of the control panel functions in the "PTA Control Panel" Manual delivered with the processor.

ADJUSTABLE FEET (24)

The feet underneath the stand are helpful when levelling out the processor and adjusting the processor height to a platesetter (CTP On-Line processors).

OUTPUT SENSORS (25)

The processor is equipped with 2 output sensors in the dryer section. Together with the input sensors **(16)** the output sensors help to detect a plate jam in the processor. Also the output sensors measure the plate length to be used by the processor's plate size recognition system to calculate the processing area.

HAND-SHOWER (26)

(Not all models)

The hand-shower is located in a bracket at the rear right side of the processor.
Use the hand-shower for cleaning purposes.

FEED TABLE (27)

(Off-Line processors only)

The plate is fed into the processor from the feed table. The feed table is equipped with a pair of guide pins in each side to ensure that the plate is fed straight into the processor.

EMERGENCY STOP-BUTTON (28)

The processor is equipped with a number of emergency stop-buttons placed in the front panel just above the feed entrance. On some models a button is located in the left side fender.
When pushed the button immediately cuts off all power to the processor.

2

CLEANING AND MAINTENANCE

GENERAL

Performing cleaning and maintenance regularly reduces the chances of equipment failure and the loss of processing quality.
Only one person should be responsible for performing the preventive maintenance program. That person should be familiar with the equipment as well as its operational characteristics and maintenance requirements.

The major clean-up procedure can be performed in two to four hours depending on the condition of the machine and on the proficiency of the person cleaning it.

NOTE! Personnel performing any maintenance, cleaning or servicing must familiarize themselves with the safety instructions and environmental protection described in the "Safety Instruction Manual" before attempting any of these procedures.

CAUTION! Do not cover the machine with a cloth or piece of plastic to protect it from dust, as this prevents free circulation around the machine and can lead to condensation and overheating.

CAUTION! Be sure to disconnect electrical power and unplug the unit before performing any cleaning or maintenance.

CLEANING ACCESSORIES

CAUTION! Never use hard tools or abrasive materials when cleaning any part of the processor.

Apron, rubber gloves and eye goggles.
For personal protection.

Lint-free cloth, sponge and soft brush.
For cleaning of rollers, guides and tank walls.

Longhandled bottle brush and thin wire (ex. paper clip).
For cleaning the inside and the holes of the spray tubes.

CLEANING AGENTS

WARNING! Never use cleaning agents containing chlorinated solvents or acetic or phosphoric acid. These constitute a health hazard and could damage the processor.

STANDARD RECOMMENDATIONS

Warm water 35-40°C (95-104°F).
For normal cleaning purposes and to rinse after using other cleaning agents.

Developer
For cleaning of developer section transport rollers.

Citric acid 10%/Nitric acid 5%
For major cleaning purposes.

Commercially available biocide/strong alkalic liquid
For cleaning off heavy algae-, fungal- or bacterial growth in the wash section.

SPECIAL RECOMMENDATIONS

As some chemicals may require special cleaning agents, contact your chemicals supplier for recommendations about cleaning agents for your present processor/chemistry combination.

HAND-SHOWER

Not on all models!

(See illustration below).

The hand-shower is located on the rear right stand leg.
Use the hand-shower for cleaning purposes.

CAUTION! Only use the hand-shower when all power has been disconnected from the processor.

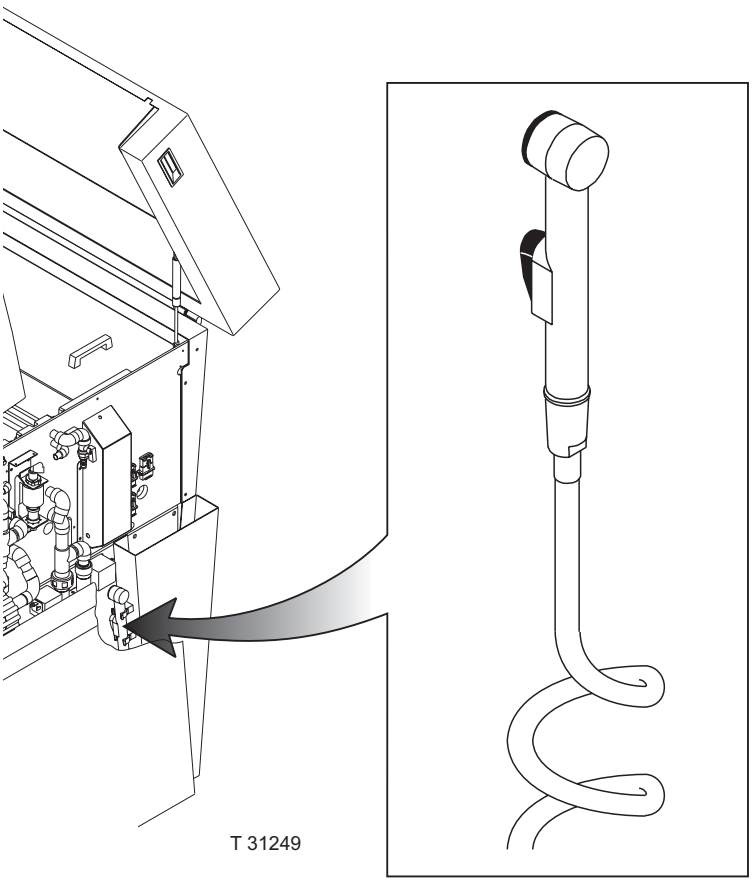

CLEANING/MAINTENANCE INTERVALS

GENERAL

NOTE! The cleaning and maintenance intervals must always correspond to the duty level of the processor.

Refer to description below as a guide for information about when and what to clean.
The various cleaning and maintenance procedures are described on the following pages.

Items marked with an asterisk (*) do not apply to all models.

DAILY

- Mechanical safety check.
- Check of container contents.
- Cleaning of transport rollers.
- Change prewash section water *.
- Change wash section water.
- Normal cleaning, gum/finisher section.

WEEKLY

- Cleaning, processor exterior.
- Cleaning preheat section rollers *.
- Normal cleaning, prewash section *.
- Normal cleaning, developer section.
- Normal cleaning, wash/rinse section.
- Major cleaning, gum/finisher section.
- Normal cleaning, dryer section.

MONTHLY

- Major cleaning, prewash section *.
- Major cleaning, developer section.
  (or when changing chemistry whatever comes first).
- Major cleaning, wash/rinse section.

CHANGING OF DEVELOPER/WATER

- **DEVELOPER SECTION:**
  The developer solution should be changed regularly to maintain the processing quality of the processor. Ask your chemicals supplier for intervals. When changing the developer it is recommended to perform a major clean-up of the developer section and to change the developer filter.
- **PREWASH*/WASH SECTIONS:**
  The water in the prewash- and wash sections should be changed daily.

FILTERS

- **WATER SOLENOID FILTER:**
  The water solenoid filter should be cleaned regularly, especially if water pressure decreases heavily.
- **WASH/GUM FILTERS*:**
  The filters in the wash and gum sections should be cleaned regularly, especially if circulation decreases heavily.
- **DEVELOPER FILTER:**
  The processor will automatically indicate when the developer filter needs to be changed.
  Besides it is recommended always to change the developer filter when performing a chemistry change and/or a major cleaning of the developer section.

GENERAL PROCEDURES

MECHANICAL SAFETY CHECK

Check proper location of:
- Left/right fenders
- Top cover.
- Dryer covers.
- Covers, electronics boxes.

CLEANING, PROCESSOR EXTERIOR

NOTE! Do not use any abrasive materials when cleaning the processor panels.

- Use a lint free cloth and warm water to carefully wipe clean all surfaces, especially the exit table and the feed table (if any).

CHECK OF CONTAINER CONTENTS

NOTE! When one or more containers have been exchanged it is very important that the correct hoses are connected to them.

Developer Fill

Developer Replenishment

Check that the containers are sufficiently filled.
Refill or replace if necessary.

Gum/Finisher

Check that the container is sufficiently filled.
Refill or replace if necessary.
Replace gum/finisher if it is dirty, to thin or to thick.

Waste containers

Check that the waste containers are not almost full.
Empty or replace if necessary.

CLEANING/CHANGING FILTERS

The filters should be cleaned regularly (normally when performing cleaning of the sections) and especially if circulation decreases heavily.

PREWASH/WASH/GUM/FINISHER FILTERS

Not on all models!

(See illustration below).

These filters are located in the bottom of the tanks through the tank wall.

- Take out the filters **(1)** and wash them in warm water before reinstalling.

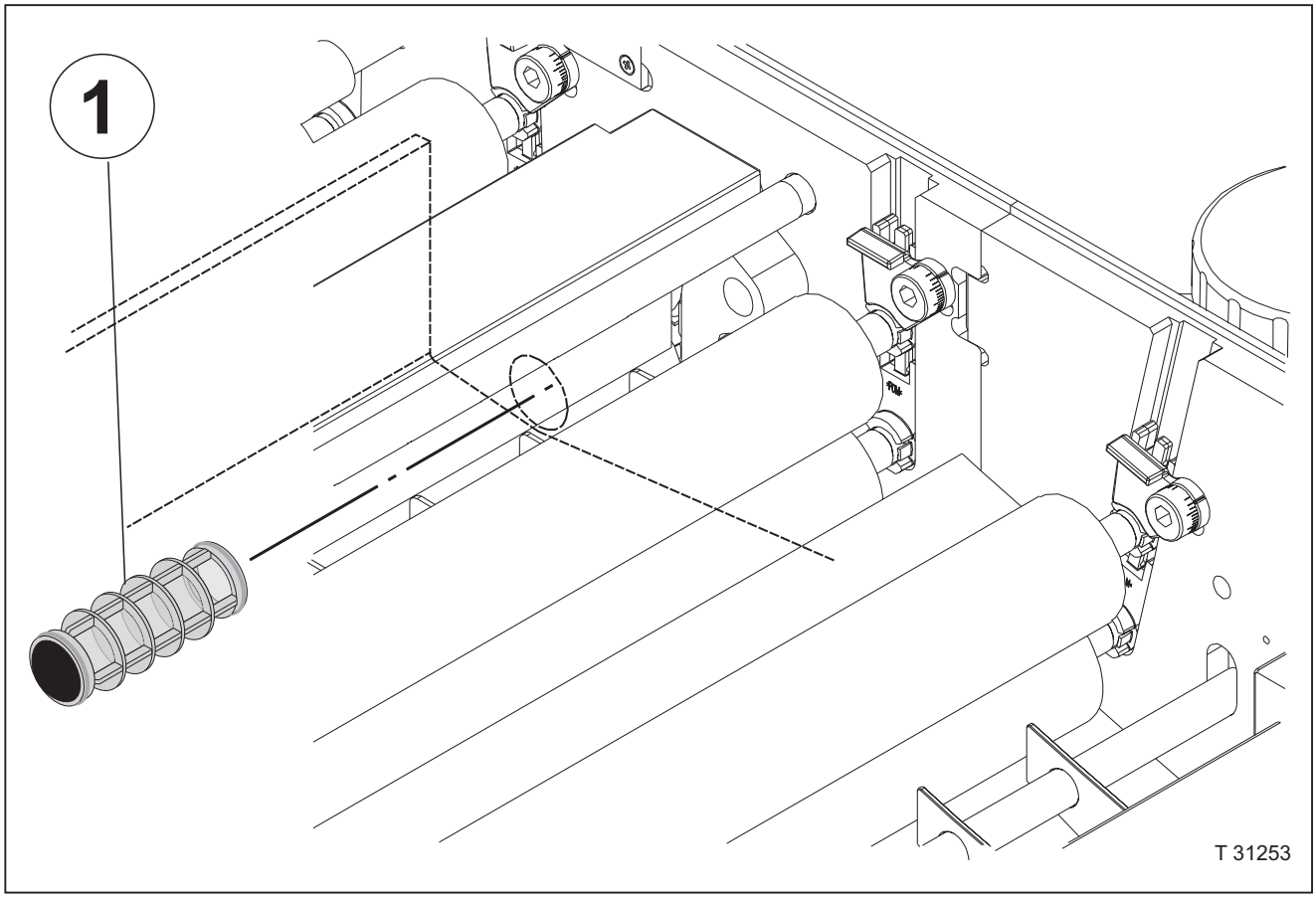

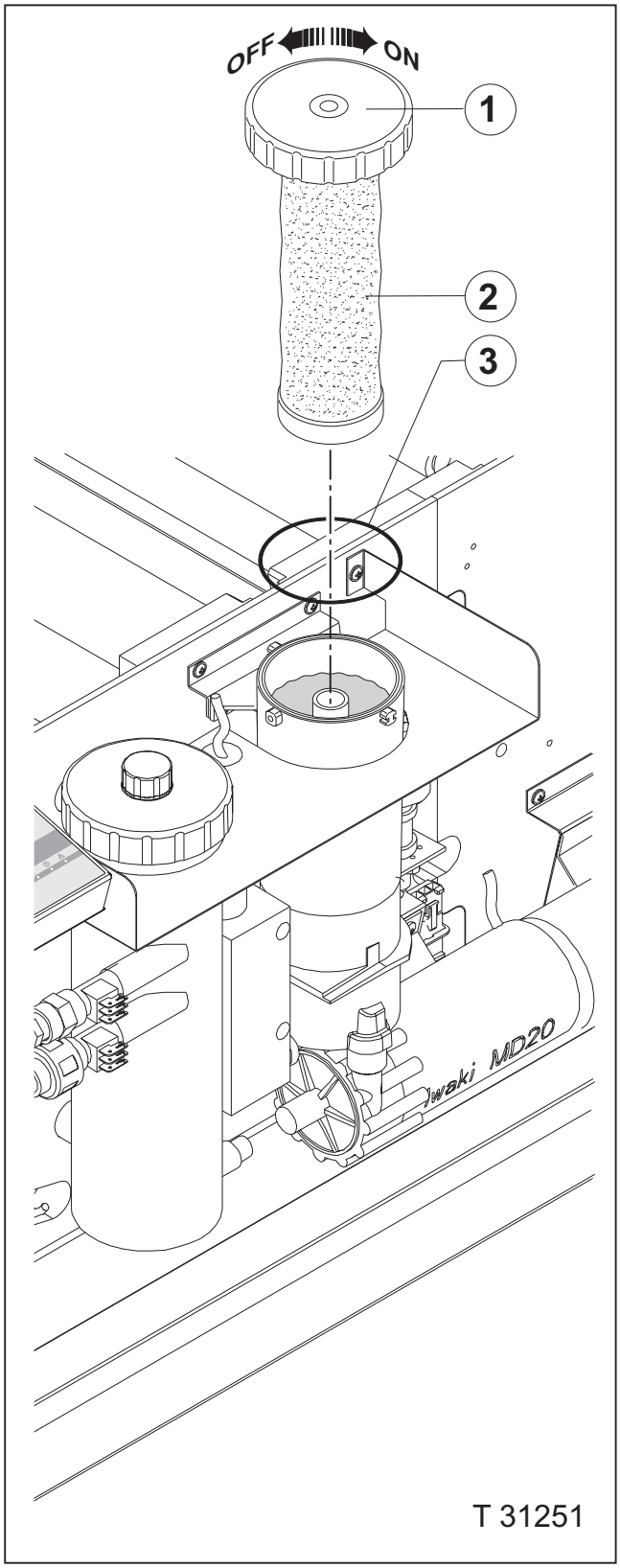

DEVELOPER FILTER

(See illustration).

CAUTION! The processor must be in “OFF” mode (or power turned off) before performing a filter change. Otherwise the developer solution will be pumped out of the filter vessel.

The developer filter is located in the filter vessel at the right tank side.

- Unscrew the filter cover **(1)** (counterclockwise) and slowly lift it off. The filter element **(2)** will hang on to the cover.
- Mount a new filter element underneath the cover and lower it **slowly** into the vessel to avoid splashing.
- Make sure that the O-ring **(3)** is fitted properly in the filter vessel groove then tighten the cover **(1)** (clockwise).
- Reset the filter area according to the description in “RESETTING FILTER AREA”.

RESETTING FILTER AREA

(See diagram).

There are 3 ways to reset the filter area:

- **1:**
  If filter has been changed because of the "REPLACE FILTER" alarm the filter area is reset when pushing "OK" in the alarm display.
- **2:**
  If filter has been changed because of the "CHANGE FILT" alarm the filter area is reset when pushing "RESET" in the alarm display.
- **3:**
  If filter has been changed because of the "FILTER XXm2" warning or because the chemistry has been changed the filter is reset as follows:
  - From the "READY" display push "MENU".
  - Use "Up/Down" keys to locate the "STATISTICS" function and push "ENTER".
  - Use "Up/Down" keys to locate the "D FILT" parameter and push "RESET".
    The value will be reset to a value corresponding to the max. area of plate to be processed before next filter change.
  - Push "EXIT" to return.

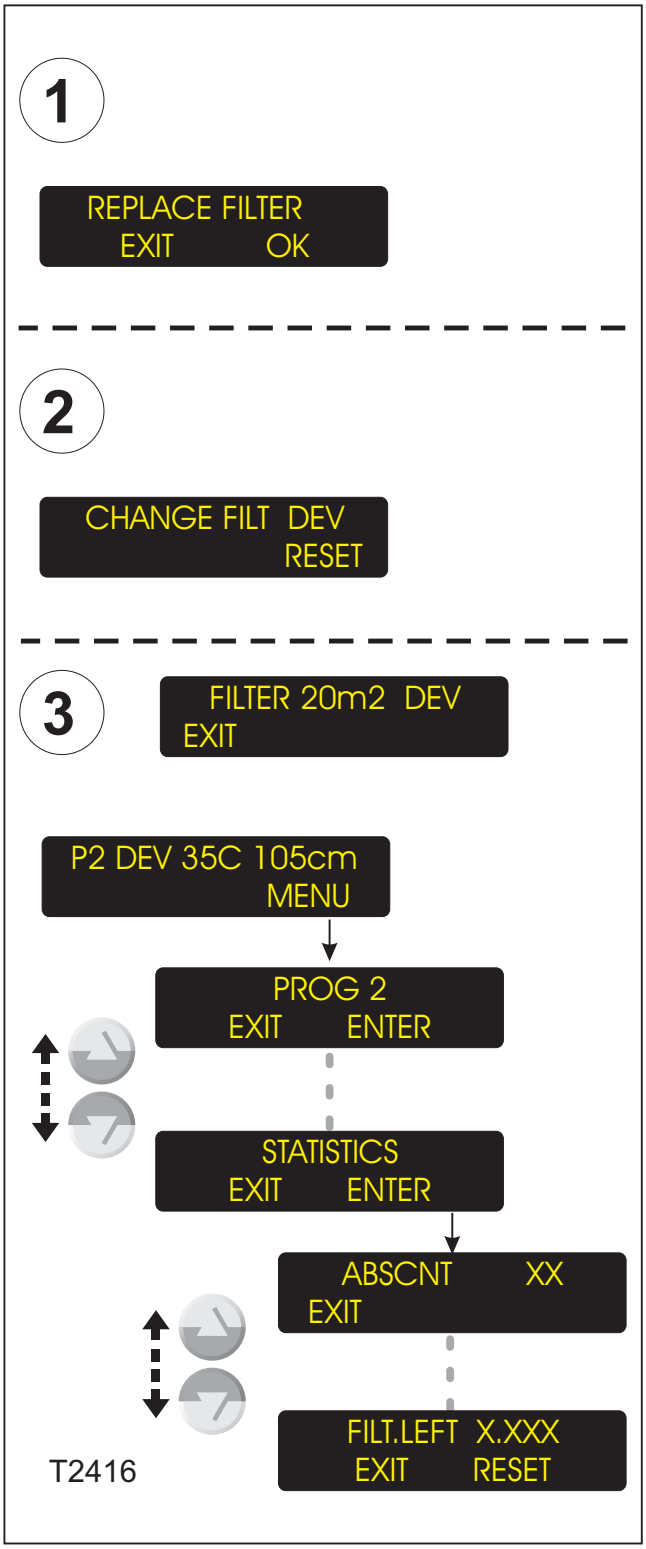

WATER SOLENOID FILTER

Not on all models!

(See illustration).

The water solenoid filter is located in the water solenoid valve inlet.

- Dismount the water inlet hose **(1)** from the solenoid valve.
- Take out the water filter **(2)** and clean it in warm water before reinstalling.

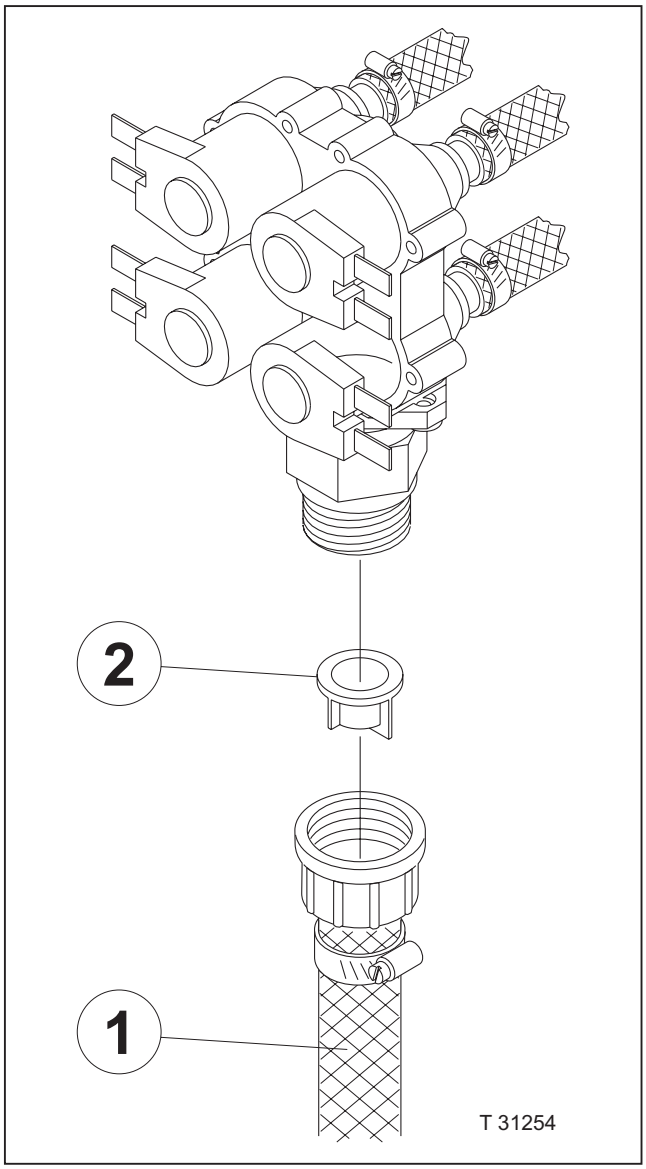

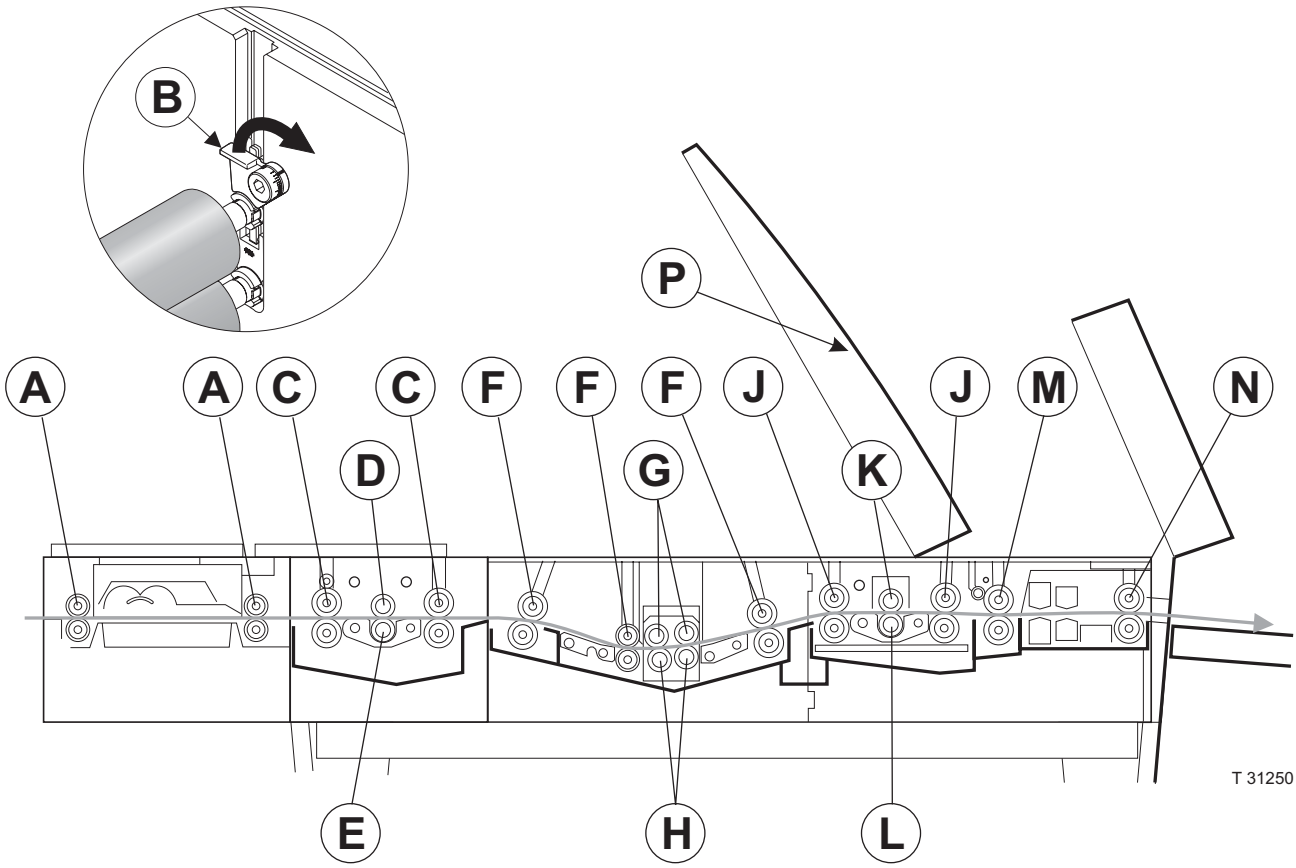
B
P
A
A
C
C
F
F
F
J
J
M
N
D
G
K
E
H
L
T 31250

PREHEAT SECTION

CLEANING THE ROLLERS

(See illustration opposite)

- Remove the rubber rollers **(A)** from the preheat section and clean them with a cloth moistened with water.
- Reinstall rollers in their proper positions.

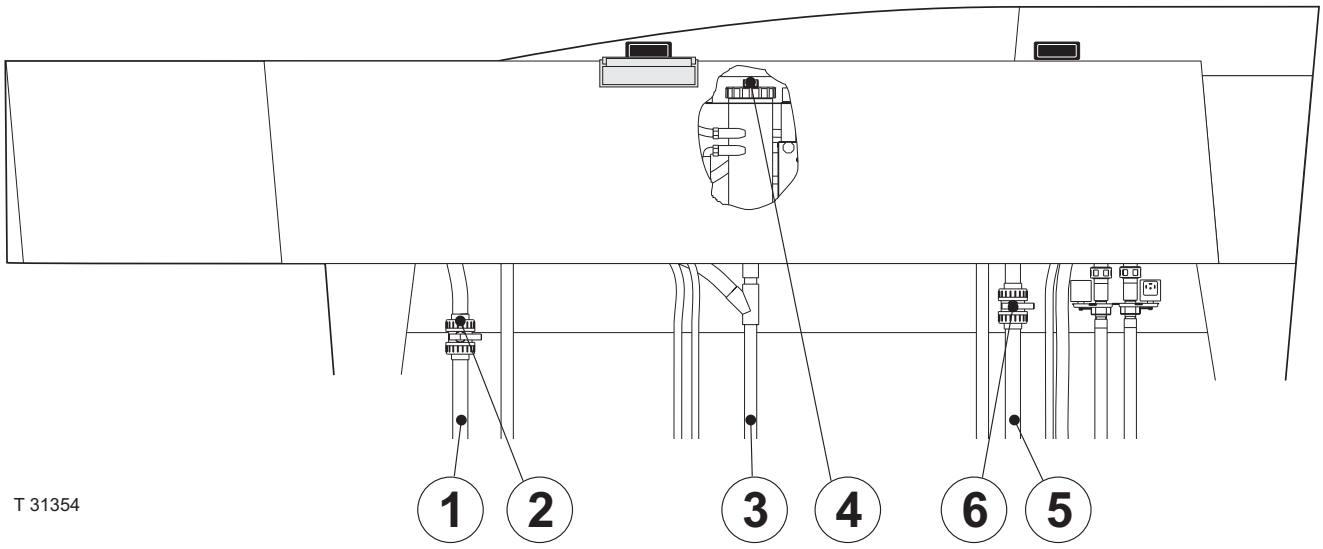
T 31354
1
2
3
4
6
5

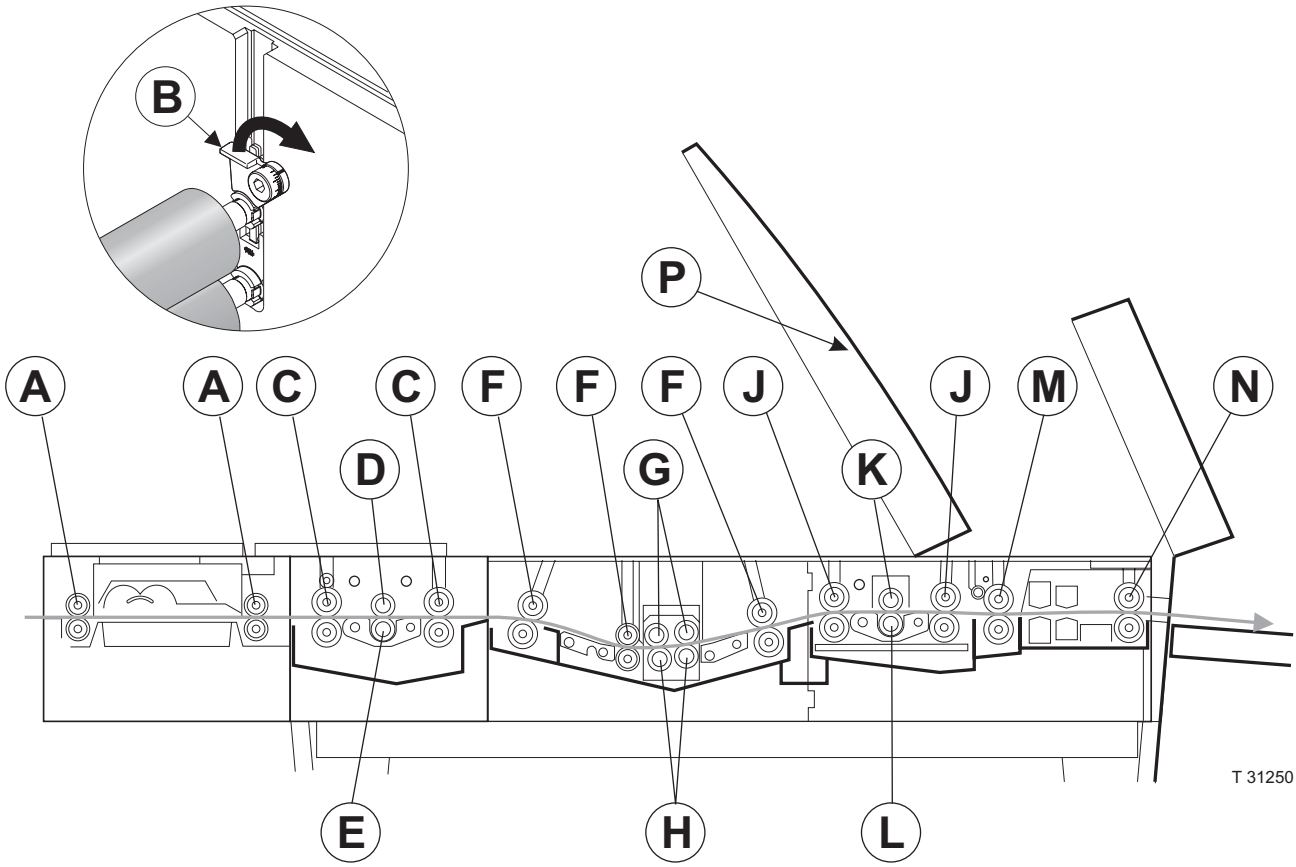
B
P
A
A
C
C
F
F
F
J
J
M
N
D
G
K
E
H
L
T 31250

PREWASH SECTION

CHANGING THE WATER

NOTE! The water should be changed daily to avoid the formation of algae.

(See illustrations opposite)
- Turn the processor off.
- Lead the prewash drain hose **(1)** into a separate waste container and drain the prewash tank by opening the drain valve **(2)**.
- Close the drain.
- When turning on the processor, it will automatically fill the prewash section with fresh water.

NORMAL CLEANING

(See illustrations opposite)
- Turn the processor off.
- Check that the prewash drain hose **(1)** is lead to a drain, then drain the prewash tank by opening the drain valve **(2)**.
- Open the roller locks **(B)**.
- Remove spray-tubes, transport rollers **(C)**, brush **(D)**, brush support roller **(E)**, and guides from the section.
- Clean rubber rollers with a cloth or brush and water.
- While running water over the brush, draw it through your hand (use rubber gloves).
- Wash the gears, tank bottom and walls with water using a cloth or soft brush, removing all slime.
- Clean the guides with a brush and water.
- Clean the spraytubes outside with a cloth or toothbrush and water and the inside using a longhandled bottle brush.
  Clean the holes in the spray tubes with a piece of thin wire (ex. a paper clip).
- Clean the roller adjustment bracket with a brush (see illustration below).
- Take out the filter and clean it as described in “CLEANING/CHANGING FILTERS” earlier in this chapter.
- Make sure that all parts are reinstalled in their proper place after cleaning.

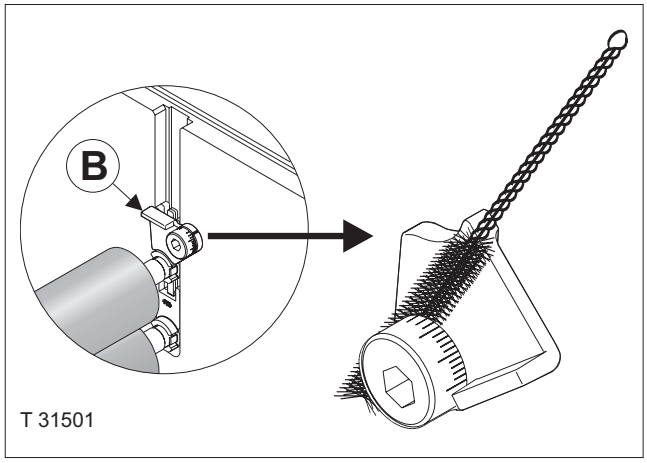

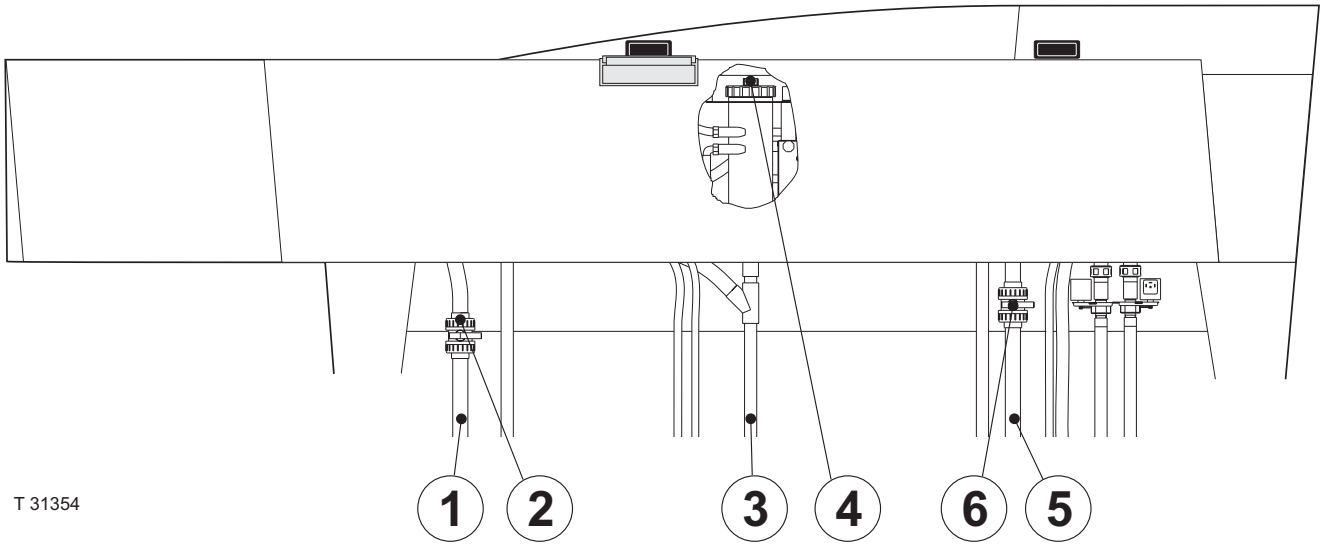
T 31354
1
2
3
4
6
5

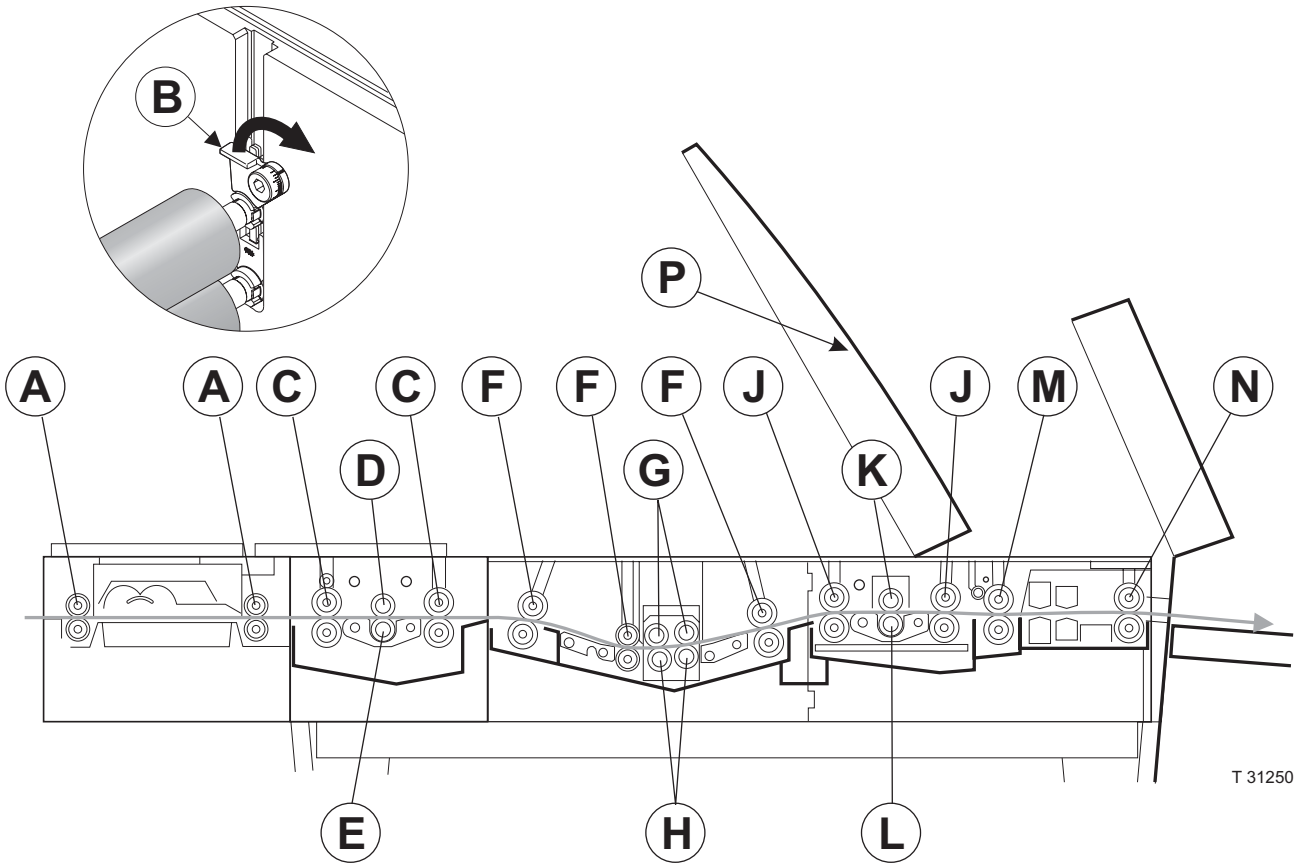
B
P
A
A
C
C
F
F
F
J
J
M
N
D
G
K
E
H
L
T 31250

DEVELOPER SECTION

(See illustrations opposite)

NORMAL CLEANING

(See illustrations opposite)

- Turn the processor off.
- Lead the developer drain hose **(3)** into a separate waste container and drain the developer tank by opening the drain valve **(4)**.
- Fill the developer section with cleaning agent. Turn the processor on and let it run in "STAND-BY" mode for 15 min.
- Drain the cleaner from the section (can be used at least 3 times).
- Fill the section with water and let the processor run for another 15 min. then drain the water again.
- Open the roller locks **(B)**.
- Remove developer dome, spray-tubes, transport rollers **(F)**, brushes **(G)**, brush support rollers **(H)**, and guides from the section.
- Wash the gears, tank bottom and walls with water using a soft brush.
- Clean rubber rollers with a cloth or brush and water.
- While running water over the brushes, draw them through your hand (use rubber gloves).
- Clean the guides with a brush and water.
- Clean the spraytubes outside with a cloth or brush and water and the inside using a longhandled bottle brush.
  Clean the holes in the spray tubes with a piece of thin wire (ex. a paper clip).
- Clean the roller adjustment bracket with a brush (see illustration below).
- **Not all models:**
  Clean the conductivity probe as described in "CLEANING OF THE CONDUCTIVITY PROBE" later in this chapter.
- Change the developer filter as described in "CLEANING/CHANGING FILTERS" earlier in this chapter.
- Make sure that all parts are reinstalled in their proper positions after cleaning.
- Fill the tank according to description in "CHANGING THE DEVELOPER" later in this chapter.

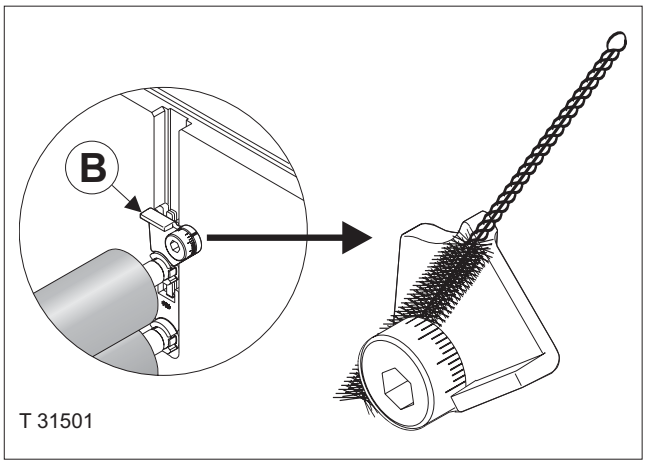

MAJOR CLEANING

- Follow procedure as for "NORMAL CLEANING" but use a cleaning agent as specified by your chemicals supplier.

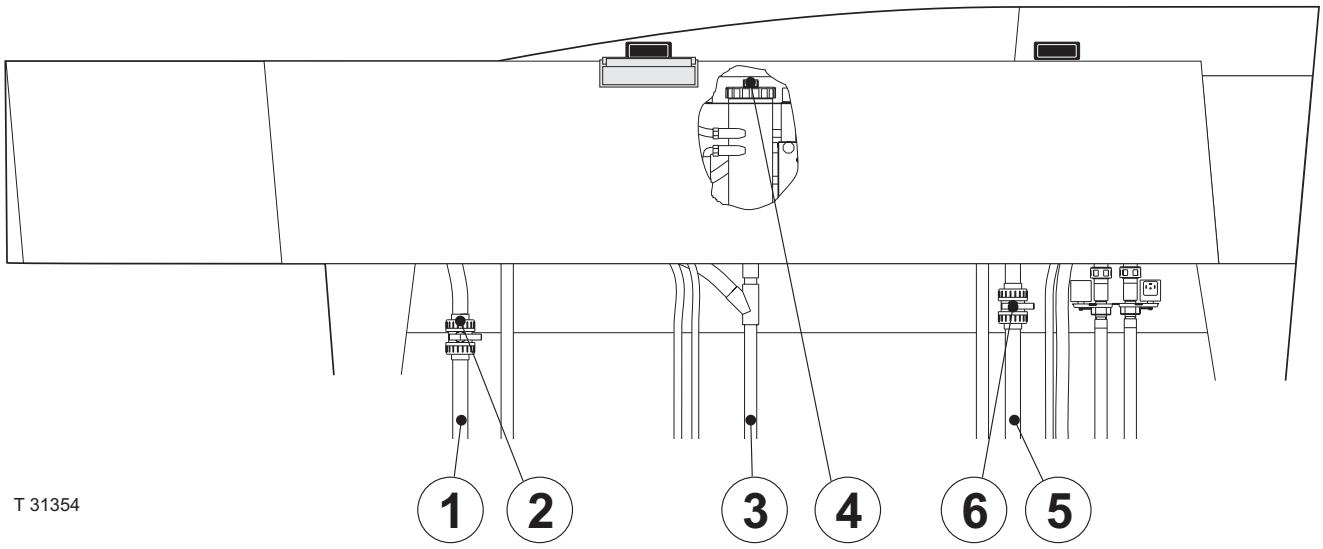
T 31354
1
2
3
4
6
5

2

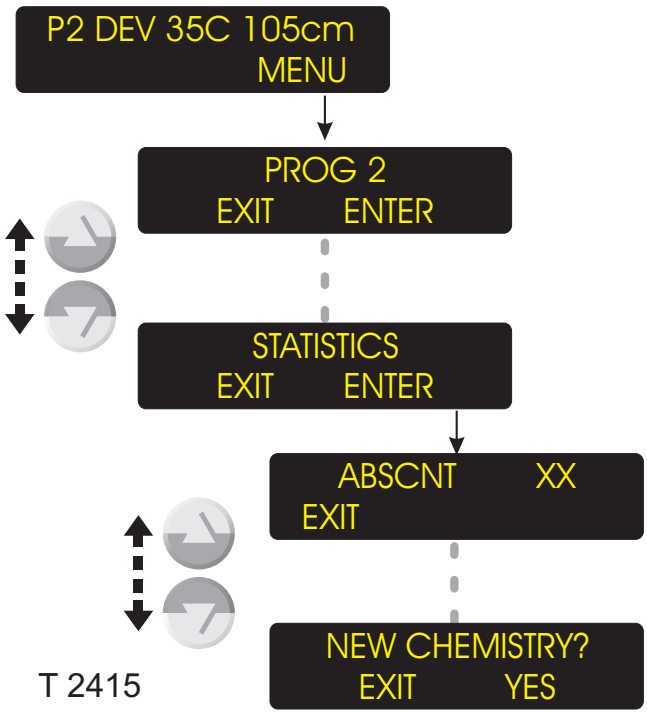
P2 DEV 35C 105cm
MENU
PROG 2
EXIT ENTER
STATISTICS
EXIT ENTER
ABSCNT XX
EXIT
NEW CHEMISTRY?
EXIT YES
T 2415

CHANGING THE DEVELOPER

(See upper illustration opposite).

- Shut down the processor completely.
  (See “SHUTDOWN PROCEDURE” described in Section 1 in this manual).
- Lead the developer drain hose **(3)** into an empty waste container (min. 40 litres).
- Open the drain valve **(4)** by turning it counterclockwise.
- When tank is empty clean it according to description in “NORMAL CLEANING” earlier in this chapter.
- If necessary change the filter element as described in “CHANGING/CLEANING OF FILTERS” earlier in this chapter.
- Close the valve **(4)**.
- Turn on the processor and push the "STAND-BY" button.
  You will be asked if you want the developer tank to be filled with new chemistry. Push "YES".
  Then you will be asked if the machine has been cleaned (if HISTORY is set to ON in GENERAL). Push "YES".
- The processor will turn into "STAND-BY" mode and automatically start to fill the developer section with new chemistry.

NOTE! On processor with small fill-up pumps using readymixed chemistry it may be necessary to manually add chemistry also.

- ***Not all models:***
  If processor is equipped and configured with a Conductivity Control System it will measure the conductivity of the fresh chemistry to determine the target value for the system.

2

CLEANING OF THE CONDUCTIVITY PROBE

Not all models!

(See illustration).

CAUTION! The processor must be in “OFF” mode (or power turned off) before performing the cleaning. Otherwise the developer solution will be pumped out of the probe holder.

- Pull out the probe **(1)** from the holder **(2)**.
  Hold a cloth underneath to catch developer drops.
- Clean the probe in warm water using a soft brush.
  Special attention should be given to the pointed out areas.

CAUTION! Be very careful not to damage the measuring electrodes inside the hole and the small pin in the probe.

- Reinstall the probe **(1)** pushing it down as far as it goes.

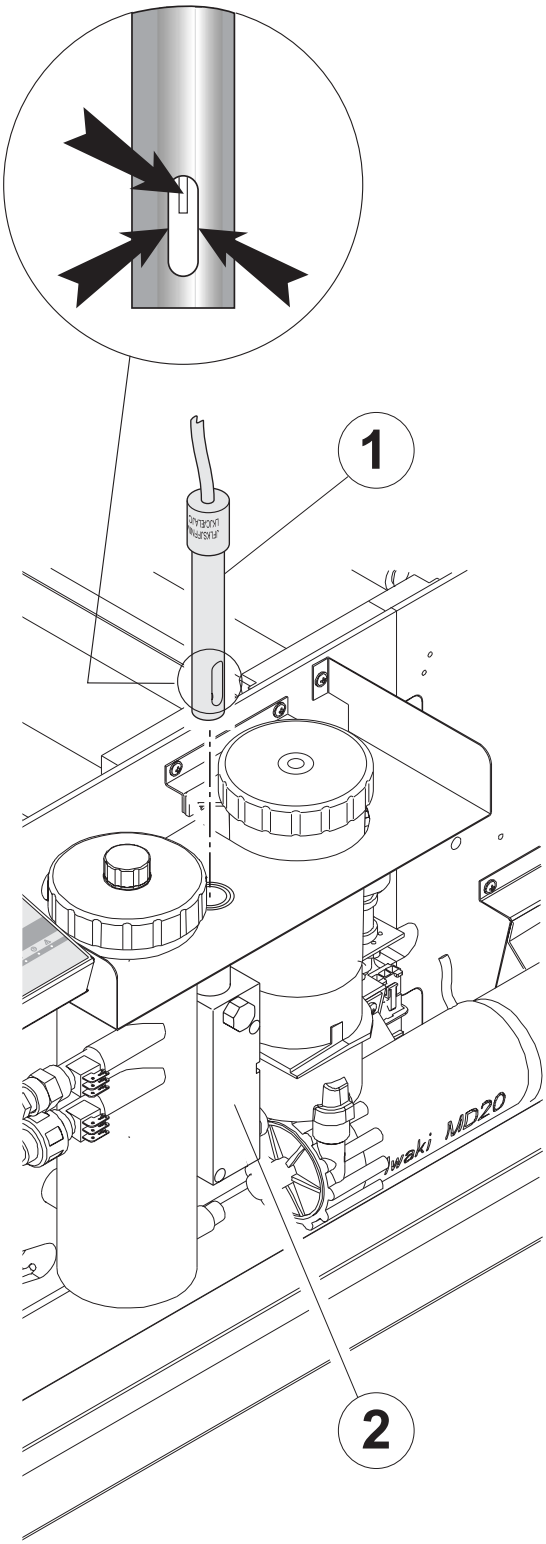

T 31255

2

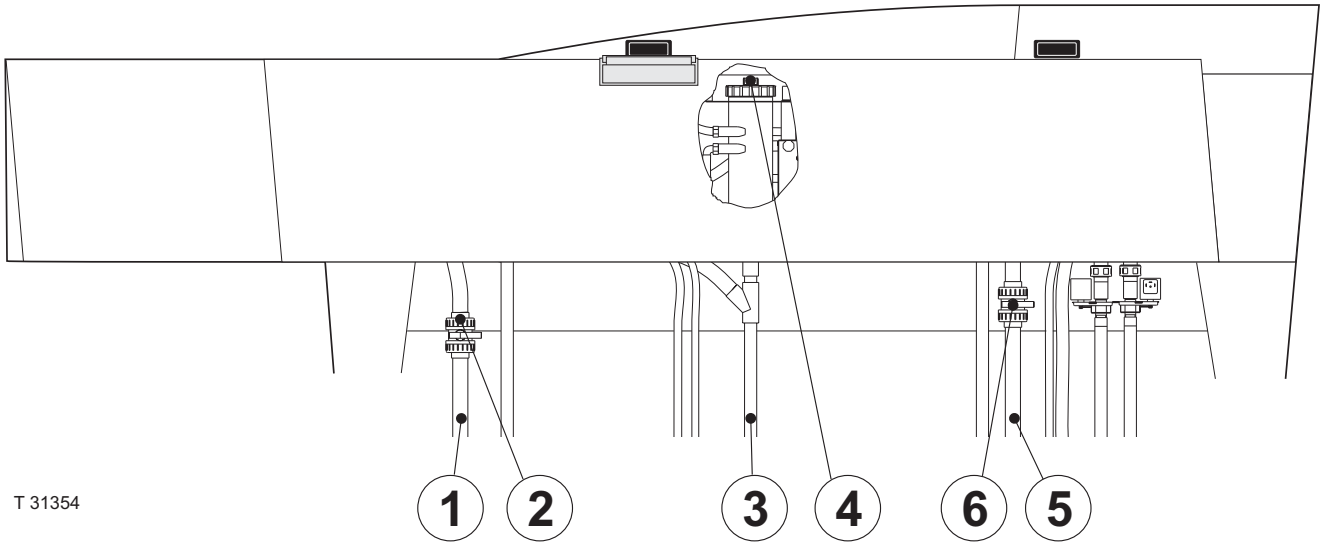
T 31354
1
2
3
4
6
5

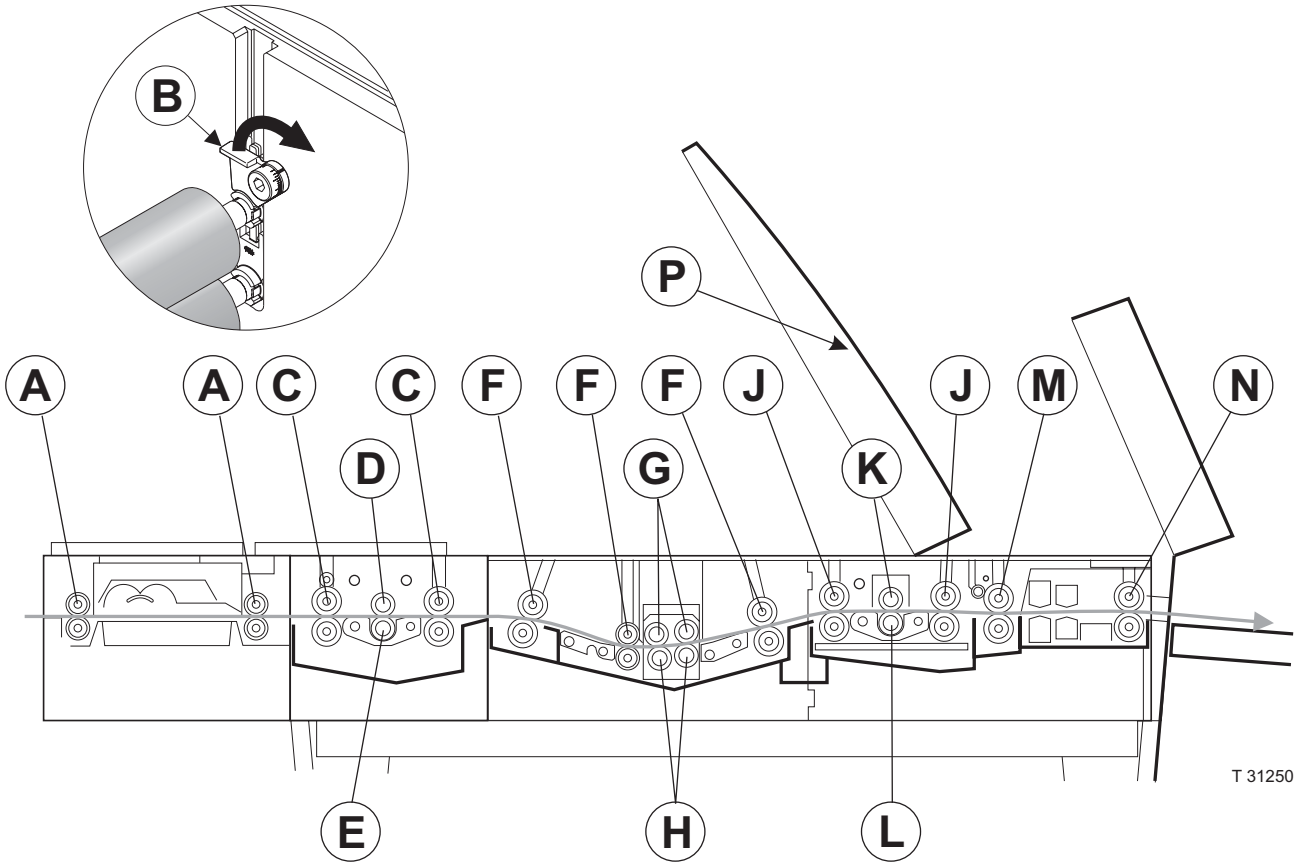
B
P
A
A
C
C
F
F
F
J
J
M
N
D
G
K
E
H
L
T 31250

WASH/RINSE SECTION

CHANGING THE WATER

NOTE! The water should be changed daily to avoid the formation of algae.

(See illustrations opposite)
- The processor must be turned off.
- Drain the wash tank by opening the drain valve **(6)**.
- Close the drain valve **(6)**.
- When turning on the processor, it will automatically fill the wash section with fresh water.

NORMAL CLEANING

(See illustrations opposite)
- Turn the processor off.
- Check that the wash drain hose **(5)** is lead to a drain, then drain the wash tank by opening the drain valve **(6)**.
- Open the roller locks **(B)**.
- Remove spray-tubes, transport rollers **(J)**, brush **(K)**, brush support roller **(L)**, and guides from the section.
- Clean rubber rollers with a cloth or brush and water.
- While running water over the brush, draw it through your hand (use rubber gloves).
- Wash the gears, tank bottom and walls with water using a cloth or soft brush, removing all slime.
- Clean the guides with a brush and water.
- Clean the spraytubes outside with a cloth or toothbrush and water and the inside using a longhandled bottle brush.
  Clean the holes in the spray tubes with a piece of thin wire (ex. a paper clip).
- Clean the roller adjustment bracket with a brush (see illustration to the right).
- Take out the filter and clean it as described in “CLEANING/CHANGING FILTERS” earlier in this chapter.
- Make sure that all parts are reinstalled in their proper place after cleaning.

MAJOR CLEANING

- Follow procedure described for normal cleaning, but use a 10% citric acid solution instead of water.

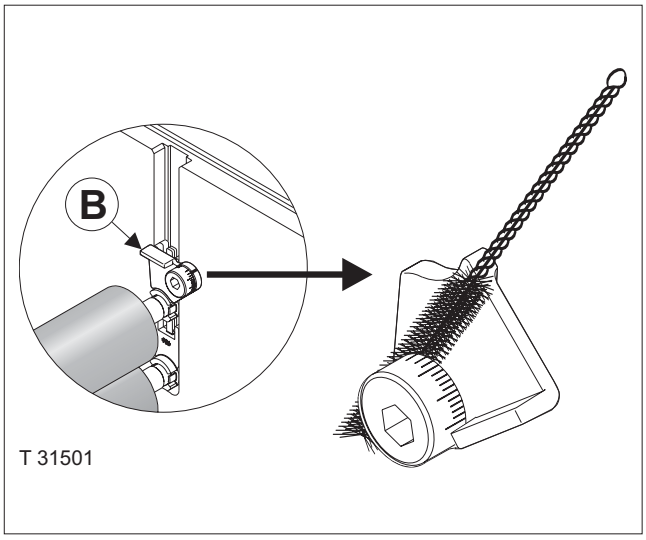

2

GUM SECTION

NORMAL CLEANING

- Clean the roller adjustment bracket with a brush (see illustration below).
- Run the “GUM-RINSE” program every day when shutting the processor down.
  There are 2 ways of running the “GUM-RINSE” program:
  - Start the “GUM-RINSE” program from the main menu on the control panel.
    or
  - Use “AUTO-MODE” function to start-up and shut down the processor automatically. The “AUTO-MODE” function can be set up to run the “GUM-RINSE” program automatically before shutting down.

When “GUM-RINSE” program finishes, the processor automatically shuts down (to OFF-mode).

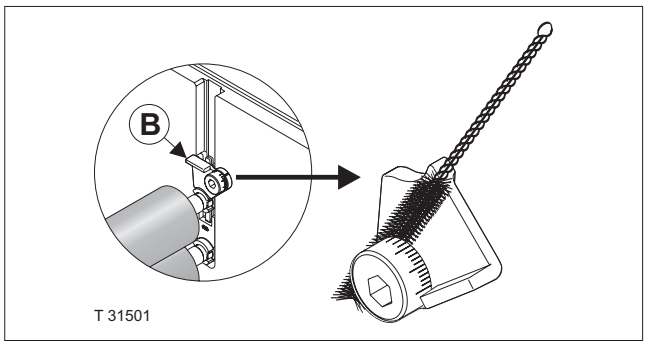

MAJOR CLEANING

(See illustration below).

- Run the “GUM-RINSE” program as described in “NORMAL CLEANING”.
- When processor has shut down open the roller locks **(B)** and remove spray-tube and rollers **(M)** from the section.
- Clean rollers with a cloth or brush and water.
- Thoroughly remove all old gum from the gears.
- Clean the spraytube outside with a cloth or toothbrush and flush it inside with water.
- Reinstall all parts again. Make sure that all parts are reinstalled in their original positions.

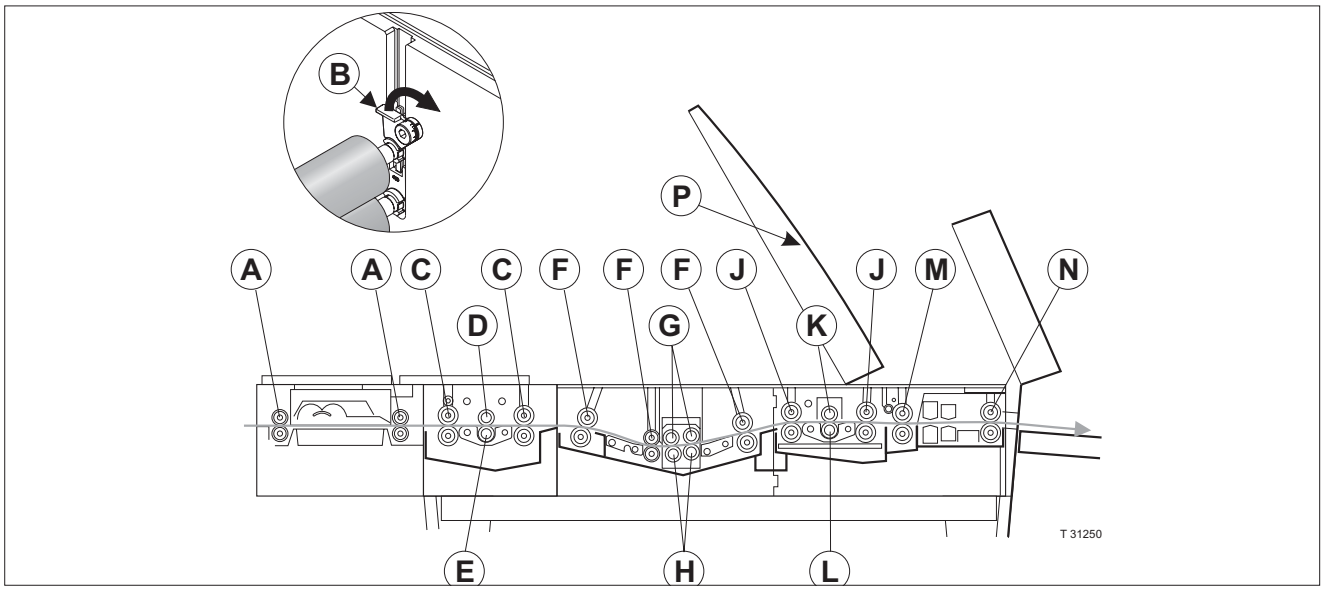

DRYER SECTION

NORMAL CLEANING

(See illustration below)

- Remove the rollers **(N)** from the section and clean them with a moist cloth.
- Reinstall rollers again.